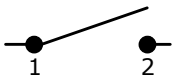

CIRCUIT: SPST

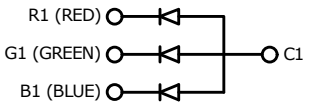

LED SCHEMATIC

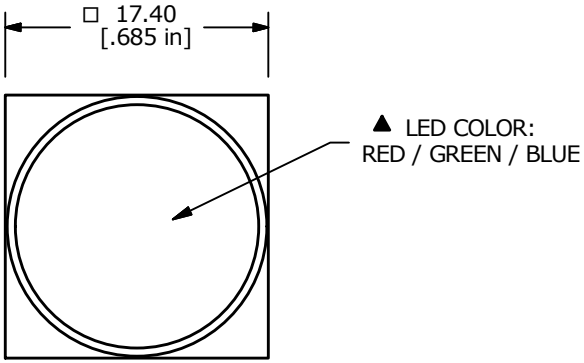

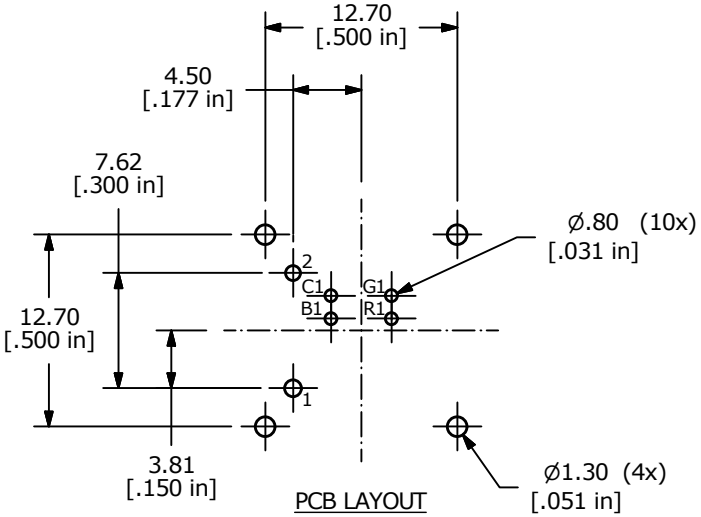

PCB LAYOUT

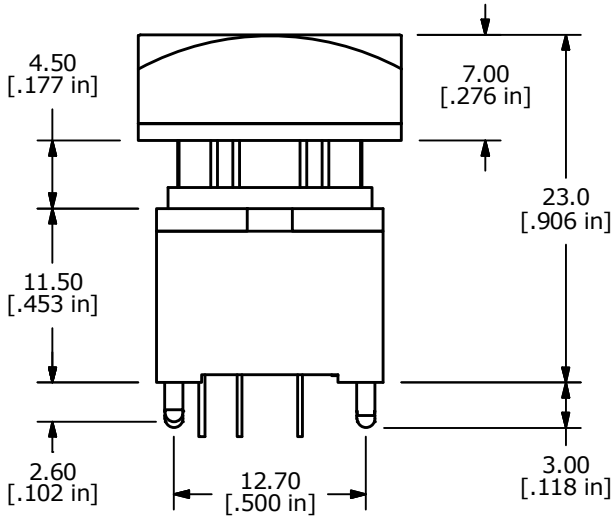

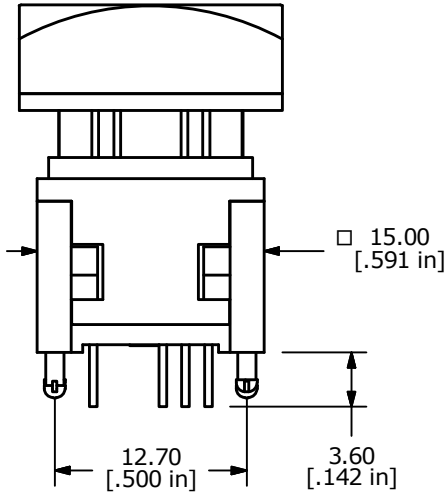

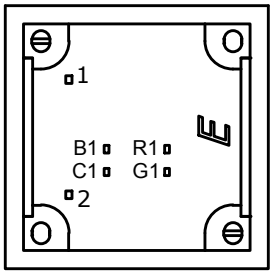

NOTES:
1. ALL DIMENSIONS IN MM [INCH]
2. GENERAL TOLERANCE: X.X = ± 0.4
   X.XX = ± 0.25
3. TERM. NOS. FOR REFERENCE ONLY.
4. RATING: 12VDC, 100mA
5. CONTACT MATERIAL: GOLD PLATED
6. CONTACT RESISTANCE: 200 mΩ MAX.
7. INSULATION RESISTANCE: 500VDC, 100 MΩ MIN.
8. OPERATING FORCE: 200 ± 80gf
9. MECHANCIAL LIFE: 2,000,000 CYCLES
10. OPERATING TEMP: -40˚C TO +85˚C
▲11. LED COLORS: RED / GREEN / BLUE
12. TRAVEL: 4.50mm±0.20
13. 2002/95/EC (ROHS) COMPLIANT
14. ▲ DENOTES CRITICAL PARAMETER.
▲15. SWITCH HAS TACTILE FEEDBACK WHEN ACTUATED

LED SPECS	UNITS	RED	GREEN	BLUE
FORWARD CURRENT	mA	20	20	20
FORWARD VOLTAGE @20mA	V	2.1-2.5	3.2-4.0	3.1-3.8
LUMINOUS INTENSITY @20mA	MCD	1000	1600	400

REV	PCR NO	DESCRIPTION	DATE	BY
A	22399	INITIAL RELEASE	7/19/16	MW

THE INFORMATION CONTAINED IN THIS DOCUMENT IS PROPRIETARY
TO E-SWITCH AND IS NOT TO BE COPIED OR TRANSFERRED

E•SWITCH®

TITLE LP11OA1TCSGVL

SCALE	DATE	DR	DWG	REV
2:1	7/19/2016	MW	B233003	A